CX 1212 - 1512 - 1712

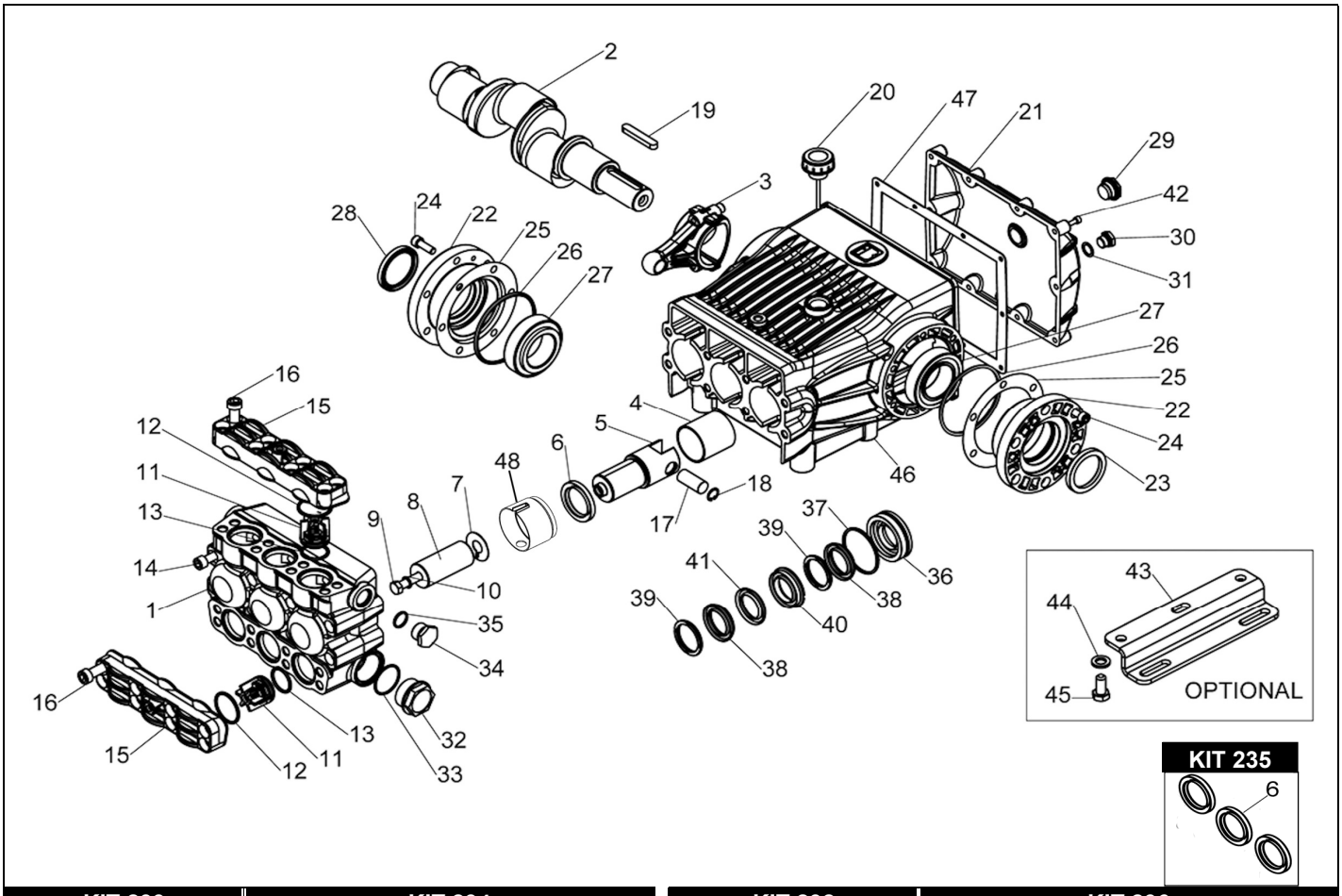

KIT 233

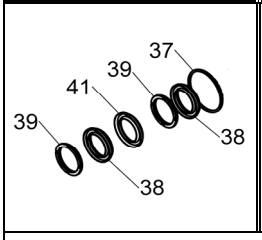

KIT 234

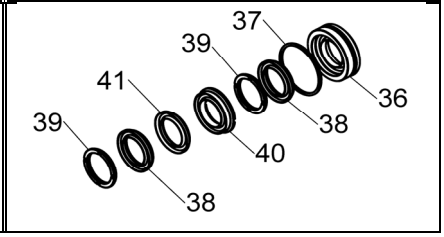

KIT 232

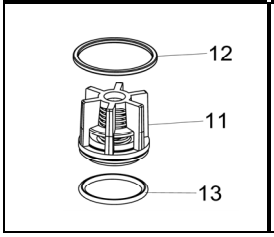

KIT 236

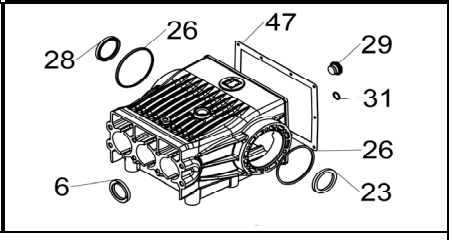

POS.	CODICE PART NO. *RÉF.*	DENOMINAZIONE - DESCRIPTION - *DESCRIPTION*	Q.TY
1	740016282	PUMP HEAD	1
2	740006262	CRANKSHAFT CX 1712	1
2	740005262	CRANKSHAFT CX 1512	1
2	740004262	CRANKSHAFT CX 1212	1
3	740086112	CONNECTING ROD	3
4	804466002	BUSH DIA.50x55x60	3
5	740009512	PLUNGER ROD	3
6-kit. 235-236	802194002	OIL SEAL DIA.45X65X8	3
7	844212002	WASHER D.20x47x1	3
8	740010182	CERAMIC PISTON DIA.40	3
9	864091102	BOLT M12X110 UNI 5737 INOX	3
10	843898002	WASHER DIA.12X20X1,5	3
11-kit. 232	740001973	VALVE ASSEMBLY	6
12-kit. 232	803264002	O-RING DIA.3,53x44,04	6
13-kit. 232	803253002	OR-RING DIA.3,53x34,52	6
14	864120002	BOLT M12X110 UNI 5931	8
15	740019282	VALVES COVER	2
16	864200002	BOLT M14X40 UNI 5931	16
17	740008492	PISTON PIN	3
18	800009002	SNAP RING DIA.20	6
19	806587002	TAB 12x8x70	1
20	853539002	OIL FILLER PLUG	1
21	740002082	BACK COVER	1
22	740022082	BEARING SUPPORT	2
23-kit. 236	802251002	OIL SEAL DIA.55X72X8	1
24	863300002	BOLT M10X30 UNI 5931	12
25	740050652	SHIM 0,1 mm	1
25	740051652	SHIM 0,2 mm	2

POS.	CODICE PART NO. *RÉF.*	DENOMINAZIONE - DESCRIPTION - *DESCRIPTION*	Q.TY
26-kit. 236	803291102	O-RING DIA.3,53X107,5	2
27	812860002	BEARING 33111	2
28-kit. 236	802099702	CAP DIA.72X8	1
29-kit. 236	853515502	OLI SIGHT GLASS	1
30	852579002	PLUG. G 3/8	1
31-kit. 236	824107002	GASKET	1
32	852753532	PLUG G 1" 1/2	1
33	803209102	O-RING DIA.2,62X40,95	1
34	852693532	PLUG G.3/4	1
35	803218002	O-RING DIA.3x22	1
36-kit. 234	740013532	BACK GLAND	3
37-kit. 233-234	803284002	O-RING DIA.3,53X68,6	3
38-kit. 233-234	802195002	V PACKING DIA.40X60X10	6
39-kit. 233-234	740035322	THRUST PIN	6
40-kit. 234	740036532	FRONT GLAND	3
41-kit. 233-234	740037322	ANTRIEXTRUSION RING	3
42	862261002	BOLT M6X30 UNI 5931	10
43	740030612	MOUNTING RAIL (OPT.)	2
44	844006002	WASHER DIA.16X27X3,5 (OPT.)	6
45	864140002	BOLT M14X30 UNI 5737 (OPT.)	6
46	740001082	CRANKCASE	1
47-kit. 236	740049722	GASKET	1
48	740088322	OIL SEAL SPACER (FROM 09/13)	3

REPAIR KIT		ITEM NO,s INCLUDED	PCS.
KIT 233	745004973	SPARE PARTS KIT	18
KIT234	745005973	SPARE PARTS KIT	24
KIT 232	745003973	SPARE PARTS KIT	18
KIT 235	745006973	SPARE PARTS KIT	3
KIT 236	745007973	SPARE PARTS KIT	11